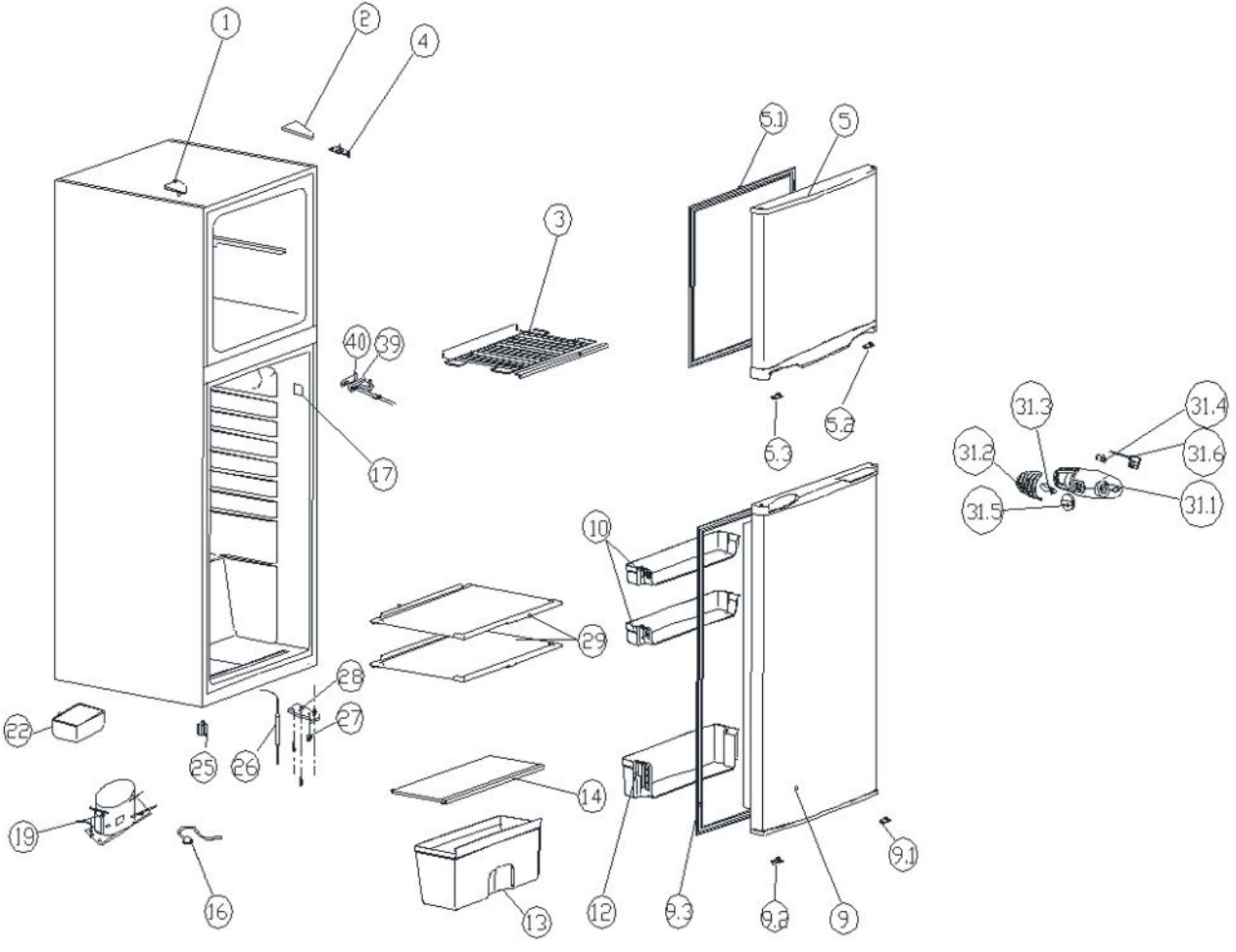
1
2
4
5.1
5
3
40
39
17
5.2
5.3
31.3
31.4
31.2
31.6
31.5
31.1
10
29
28
27
22
25
26
14
19
16
13
12
9.3
9.2
9
9.1